Erosion Control General Notes

SILT FENCE

1. THE SIZE OF THE DRAINAGE AREA SHOULD BE NO MORE THAN 1/4 ACRE PER 100 LINEAR FEET OF FENCE LENGTH.
2. THE MAXIMUM SLOPE LENGTH ABOVE THE FENCE SHOULD BE LESS THAN 100 FEET.
3. NO DITCH OR DRAINAGEWAY WITH AN AREA GREATER THAN 2 ACRES SHALL BE ENCLOSED ABOVE A SILT FENCE.
4. NO SILT FENCE SHALL BE CONSTRUCTED IN A LIVE STREAM OR DRAINAGEWAY WITH EXPECTED FLOWS GREATER THAN 1 CFS.
5. THE FILTER FABRIC SHALL HAVE A MINIMUM FILTERING EFFICIENCY OF 75%, A MINIMUM TENSILE STRENGTH OF 30 LBS. PER LINEAR INCH AND A FLOW RATE OF 0.3 GALLONS PER SQUARE FOOT PER MINUTE. THE FILTER FABRIC SHALL ALSO HAVE ULTRAVIOLET RAY INHIBITORS TO ASSURE A LIFE USE EXPECTANCY OF 6 MONTHS AT 0 TO 100 DEGREES FAHRENHEIT.
6. THE FILTER FABRIC SHALL BE 36 INCHES OR LESS IN HEIGHT, WITH JOINTS AT EVERY POST AVOIDING OVERLAP IF POSSIBLE (6" MIN. OVERLAP IF NECESSARY) AND POSTS SPACED EVERY 10 FEET WITH WIRE MESH SUPPORT OR 6 FEET WITHOUT SUPPORT, MAKING SURE THAT A MINIMUM OF 8" OF FABRIC IS BURIED IN THE 6" X 6" TRENCH.
7. THE SILT FENCE SHALL BE INSPECTED AFTER EVERY RAINFALL TO DETERMINE IF ANY PART OF THE FENCE NEEDS TO BE REPLACED. IF IT IS DETERMINED THAT THE FENCE NEEDS ANY REPAIR OR REPLACEMENT THIS SHALL BE DONE IMMEDIATELY.
8. SEDIMENT DEPOSITS SHALL BE REMOVED AFTER EACH RAINFALL OR BEFORE THEY ACCUMULATE TO 1/2 OF THE FENCE HEIGHT.

STRAW BALES

1. STRAW BALES SHOULD ONLY BE USED FOR DRAINAGE AREAS NO LARGER THAN 1/4 ACRE PER 100 FEET OF BALES OR FOR DITCHES DRAINING NO MORE THAN 2 ACRES.
2. STRAW BALES SHOULD ONLY BE USED AS A TEMPORARY MEASURE AND FOR NO LONGER THAN A TIME PERIOD OF THREE MONTHS.
3. EXCAVATE A TRENCH ALONG THE AREAS THAT THE STRAW BALES WILL BE USED AS EROSION CONTROL TO A DEPTH OF 4 INCHES AND TO THE WIDTH OF ONE STRAW BALE. THE STRAW BALES THEN SHALL BE PLACED IN THE TRENCH. SAVE EXCAVATED MATERIAL ON THE UPSTREAM SIDE OF THE TRENCH.
4. STRAW BALES SHOULD BE ANCHORED WITH A MINIMUM OF 2 STAKES OR REBARS DRIVEN INTO THE UNDERLYING SOIL, MAKING SURE THAT THE BINDING WIRE OR TWINE IS FACING THE SIDES AND NOT TOUCHING THE SOIL. THE FIRST STAKE INTO EACH BALE SHOULD BE DRIVEN TOWARD THE PREVIOUSLY LAID BALE TO FORCE THEM TOGETHER.
5. SPACING BETWEEN THE BALES SHOULD BE TIGHTLY CHINKED WITH LOOSE STRAW.
6. AFTER STRAW BALES ARE IN PLACE THE EXCAVATED SOIL SHOULD BE BACKFILLED AGAINST THE UPSLOPE SIDE OF THE STRAW BALES TO A HEIGHT OF 4 INCHES AFTER COMPACTING.
7. STRAW BALES SHOULD BE INSPECTED AFTER EACH RAINFALL TO DETERMINE IF ANY REPAIRS OR REPLACEMENTS TO THE STRAW BALES ARE NEEDED. IF IT IS DETERMINED THAT THE STRAW BALES NEED TO BE REPAIRED OR REPLACED, THIS SHOULD BE DONE IMMEDIATELY.

GENERAL NOTES

1. GRADING CONTRACTOR SHALL INSTALL AND MAINTAIN SILT FENCES AT THE DOWNHILL PERIMETER OF ALL EXCAVATION FILLS WHICH SLOPE OFF THE SITE OR ONTO EXISTING UNDISTURBED AREAS. THIS PLAN EXHIBITS GENERAL SILT FENCE LOCATIONS. ACTUAL LOCATIONS WILL DEPEND ON ACTUAL EXCAVATION OR FILL LIMITS AND DEMOLITION AND CONSTRUCTION SEQUENCING.
2. INSTALLATION OF SILT FENCES SHALL PRECEDE BEGINNING OF EXCAVATION IN EACH AREA.
3. SILT FENCES SHALL BE MAINTAINED UNTIL GRASS AND VEGETATION ,ARE ESTABLISHED AND ARE CONTROLLING EROSION.
4. TOPSOIL STOCKPILES SHALL BE SURROUNDED BY SILT FENCES INSTALLED AND MAINTAINED BY GRADING CONTRACTOR TO PREVENT EROSION OF TOPSOIL.
5. STRAW BALES OR SILT FENCES SHALL BE INSTALLED AND MAINTAINED BY STORM SEWER CONTRACTOR TO PROTECT STORM WATER INLETS FROM SILT DEBRIS.
6. ALL CONTROLLED FILL SHALL BE COMPACTED IN 6" (MAX.) LIFTS.
7. TEST ALL CONTROLLED BACKFILL AS REQUIRED BY IBC CHAPTER 18.
8. GRADING AND SITE PREPARATION SHALL CONFORM TO APWA SECTION 2100.
9. SEEDING AND SODDING SHALL CONFORM TO APWA SECTION 2400.
10. EXISTING TREES ON SITE SHALL BE CLEARED AND GRUBBED AS REQUIRED FOR THE PROPOSED IMPROVEMENTS, AS APPROVED BY THE OWNER.
11. ADDITIONAL EROSION CONTROL SHALL BE PLACED PER ANY REQUEST BY THE CITY.
12. THE OWNER / CONTRACTOR SHALL SELECT, INSTALL, UTILIZE, OPERATE AND MAINTAIN THE BMPS IN ACCORDANCE WITH THE CONCEPTS AND METHODS DESCRIBED IN KANSAS CITY METROPOLITAN CHAPTER AMERICAN PUBLIC WORKS ASSOCIATION (APWA) DIVISION V, SECTION 5100 EROSION AND SEDIMENT CONTROL AND DIVISION III, STANDARD DRAWINGS VOLUME III. THE SPECIFICATIONS AND DETAILS ARE APPENDED TO AND MADE A PART OF THIS EROSION CONTROL PLAN.
13. THE FOLLOWING EROSION AND SEDIMENT CONTROLS MAY BE IMPLEMENTED PER THE SITE REQUIREMENTS AND OWNER'S DISCRETION. (OTHER BMP'S MAY BE SELECTED FROM THE APPENDED APWA SECTION 5100 PER SITE REQUIREMENTS.)
    1) SILT FENCE
    2) STRAW BALES
    3) INLET PROTECTION – STRAW WATTLE / GRAVEL SEDIMENT TRAP
    4) STRAW WATTLE
    5) ROCK CHECK DAM
    6) VEGETATIVE BUFFER STRIP
    7) STABILIZED ENTRANCE / EXIT

THE EROSION CONTROL PLAN EXHIBITS GENERAL EROSION CONTROL LOCATIONS. ACTUAL LOCATIONS WILL DEPEND ON ACTUAL EXCAVATION OR FILL LIMITS AND DEMOLITION AND CONSTRUCTION SEQUENCING.

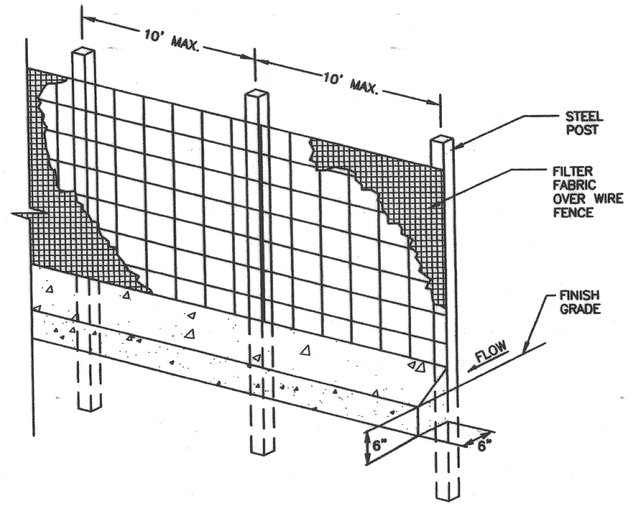

ELEVATION

NOTE:
BOTTOM OF FILTER FABRIC MUST BE PLACED IN TRENCH AND SECURED BY EITHER BACKFILLING W/ SOIL MATERIAL AND TAMPING, OR BY PLACING WASHED STONE TO A HEIGHT OF 6" ABOVE GROUND LEVEL.

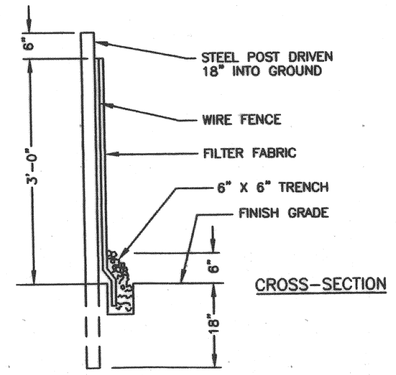

CROSS-SECTION

NOTE:
BOTTOM OF WIRE FENCE & FILTER FABRIC ARE TO BE BURIED IN A 6" X 6" EXCAVATED TRENCH.

SILT FENCE

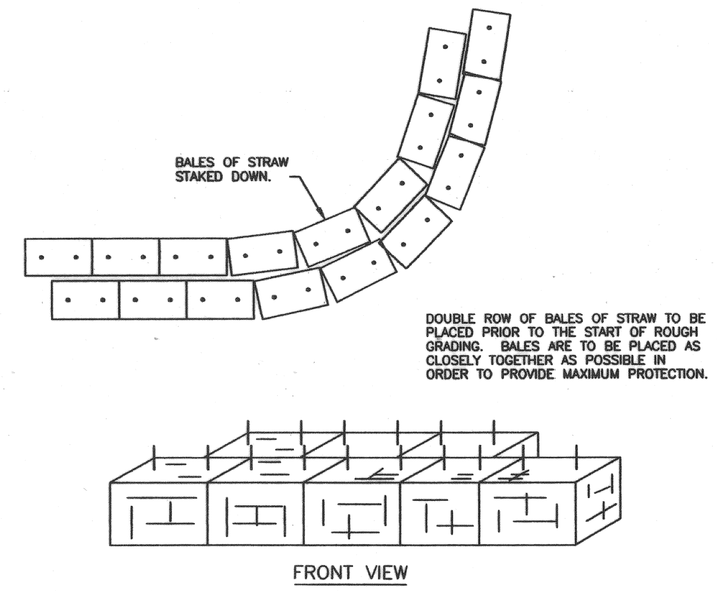

FRONT VIEW

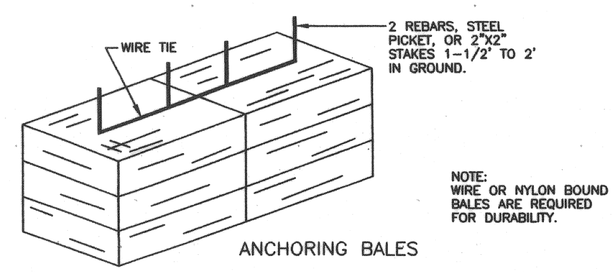

ANCHORING BALES

NOTE:
WIRE OR NYLON BOUND BALES ARE REQUIRED FOR DURABILITY.

STRAW BALE BARRIER

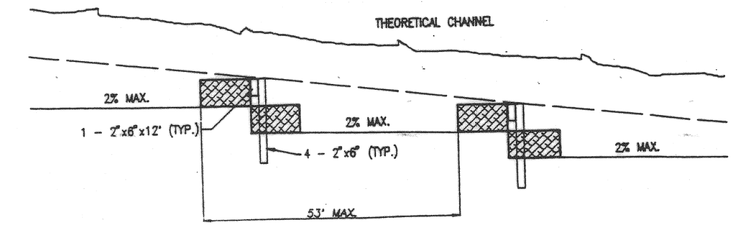

LONGITUDAL SECTON

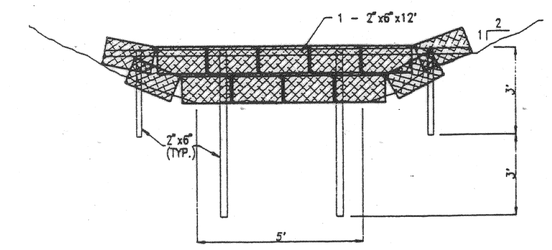

TRANSVERSE CHANNEL

SILT CONTROL DITCH & DAM

INSTALLED AFTER STORM SEWERS ARE CONSTRUCTED

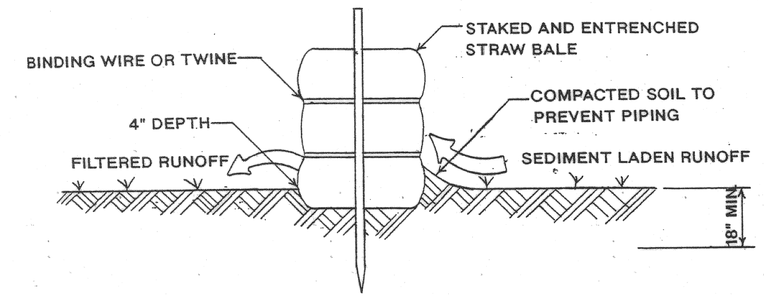

SECTION VIEW

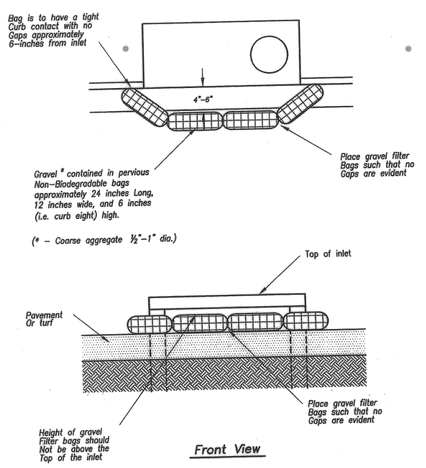

Front View

Sump Inlet Sediment Filter

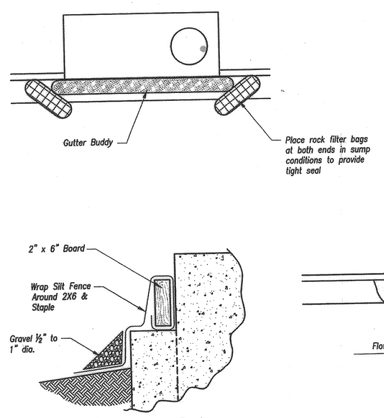

Note: For Protection Prior to Pouring Throat see note 2.

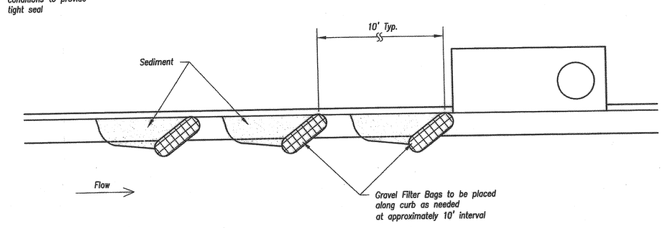

In Grade Curb Inlet Protection

Notes:

1. Alternative approved curb inlet sediment filter materials include:
   a. Log or Wattle products
   b. Gutter Buddies
   c. Other material with approval of the City
2. Immediately following inlet construction and prior to construction of curb and inlet throat, protect inlet opening by installing 2" X 6" board wrapped in silt fence.
3. Contractor to clean out sediment after each significant rainfall. Sediment removal shall not involve washing materials into inlet.
4. During construction of residential subdivisions, the filter bag shall be replaced before bag material becomes degraded. Any gravel deposited into the inlet shall be promptly removed.

CURB INLET SEDIMENT FILTER

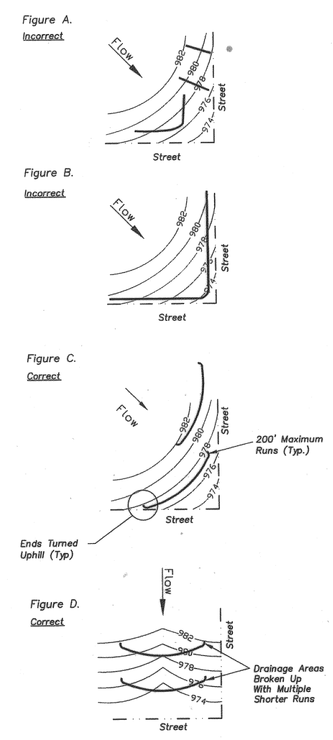

NOTES:

1. In order to contain water, the ends of the sediment fence must be turned uphill (Figures C & D).
2. Long perimeter runs of sediment fence must be limited to 200'. Runs should be broken up into several smaller segments to minimize water concentrations (Figure C).
3. Areas should be broken up with interior sediment fence to minimize water concentrations and slow runoff velocities (Figure D).
4. Long slopes should have intermediate rows of sediments fence, not just at the top and toe of the slope (Figure D).
5. Install sediment fence at the top of the slope to slow velocity and volume of water and 6' to 10' away from the toe to create a sediment storage area (Figure E).

Figure E.

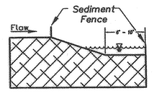

SEDIMENT FENCE LAYOUT

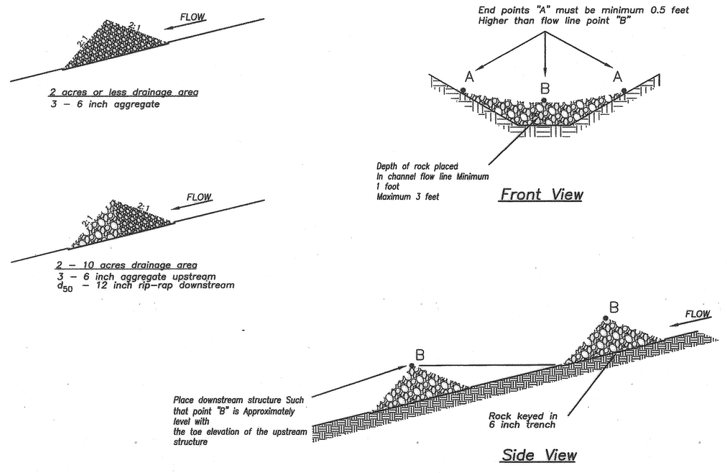

Note:
Rock check dams shall be used only for drainage areas less that 10 acres unless approved by the City

ROCK DITCH CHECK

Warrensburg
MISSOURI
Public Works

DATE:	BY:	REVISION

CITY OF WARRENSBURG, MISSOURI

EROSION CONTROL STANDARD DETAILS

SCALE: N/A	APPROVED BY:	DRAWN BY W.D.G.
DATE: 15 JUNE 08		REVISED

PROJECT NUMBER

DRAWING NUMBER