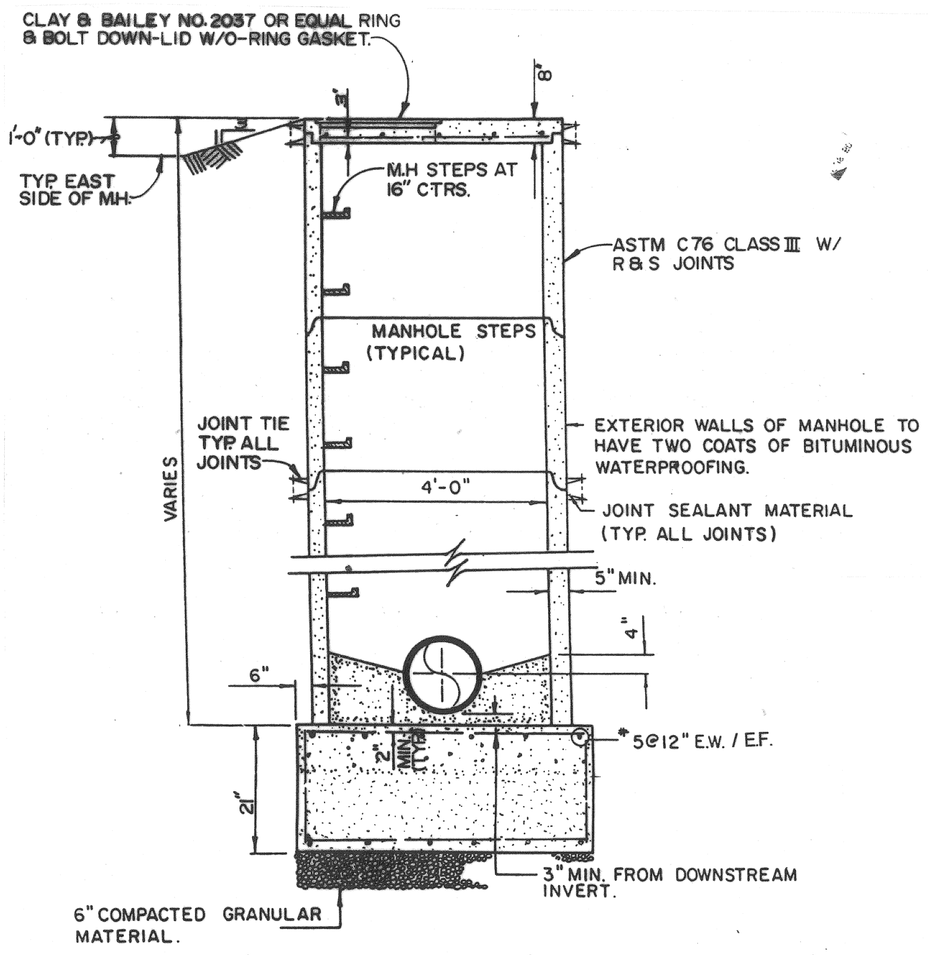

SPECIAL TYPE 3 PRECAST MANHOLE
N.T.S.

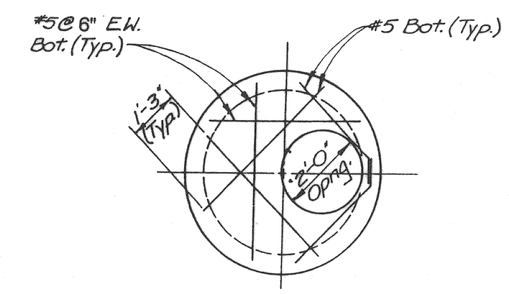

TOP SLAB PLAN FOR SPECIAL TYPE 3 MANHOLE
N.T.S.

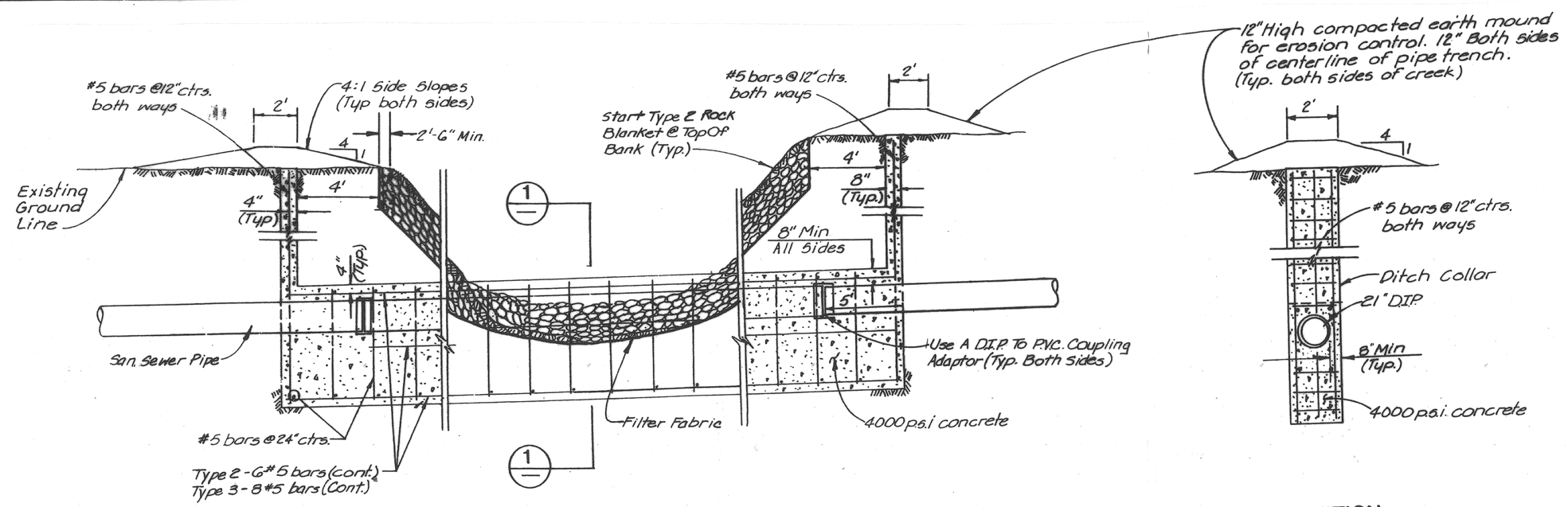

TYPES 2 AND 3 SPECIAL CONCRETE ENCASEMENT WITH DITCH COLLAR
SCALE: 1" = 4'

ELEVATION
N.T.S.

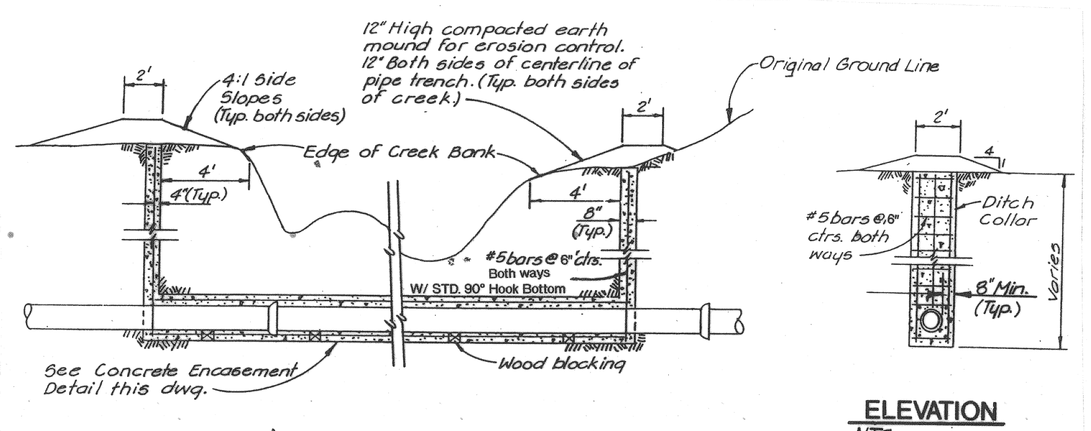

TYPE 1 CONCRETE ENCASEMENT WITH DITCH COLLAR
N.T.S.

ELEVATION
N.T.S.

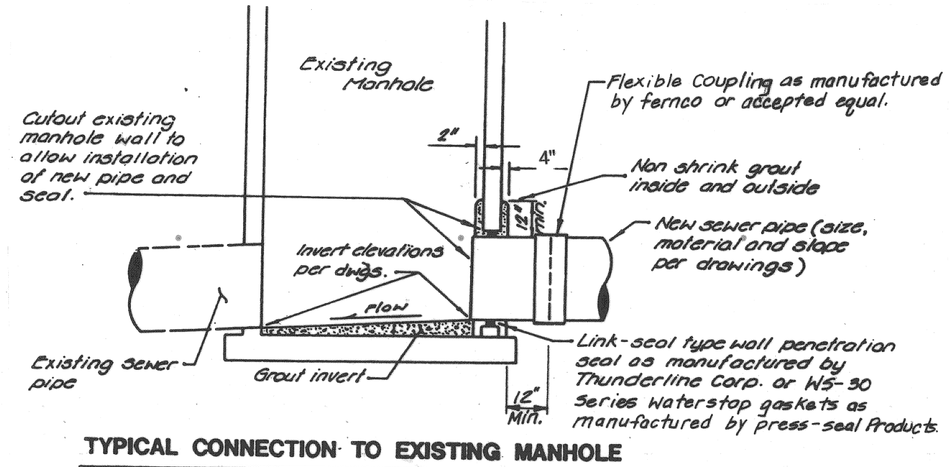

TYPICAL CONNECTION TO EXISTING MANHOLE
N.T.S.

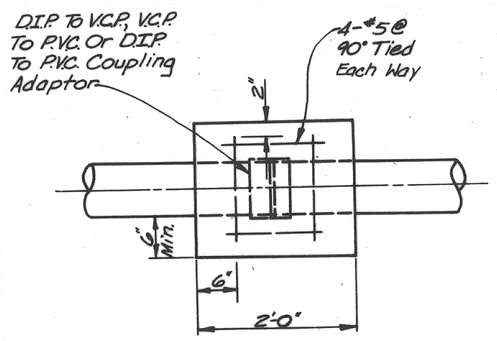

CONCRETE COLLAR DETAIL
N.T.S. (For Jointing Two Different Types Of Pipes)

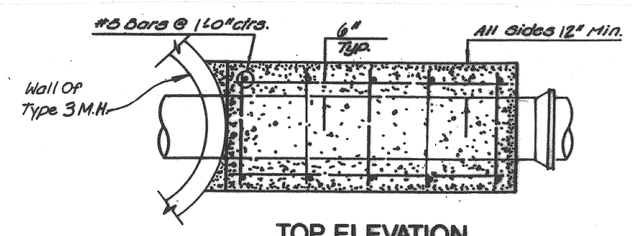

TOP ELEVATION
N.T.S.

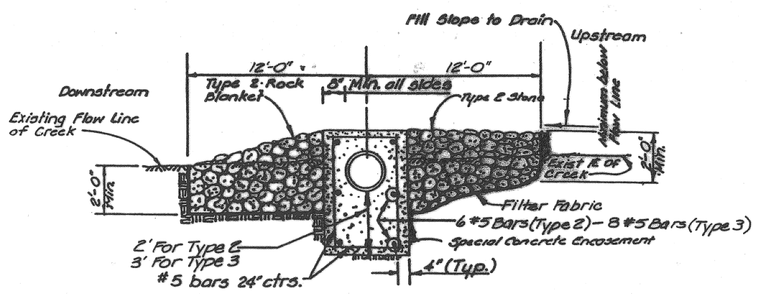

SECTION IN CREEK
N.T.S. (1)

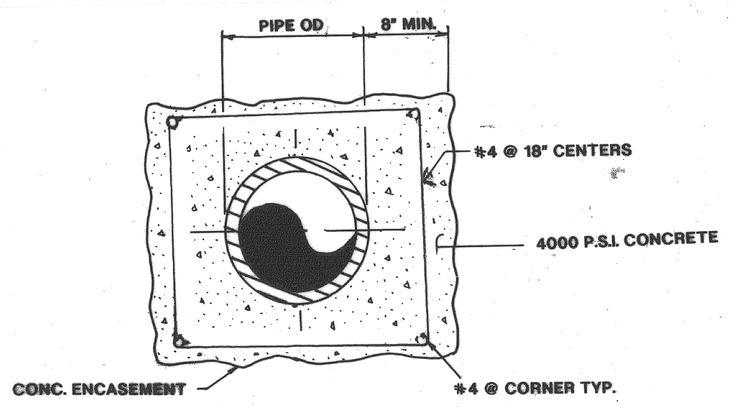

NOTES:
1. CONTRACTOR SHALL BLOCK UP PIPE TO GIVE MINIMUM PIPE CLEARANCE INDICATED
2. CONTRACTOR SHALL PROVIDE PIPE TIE DOWNS AS NECESSARY TO PREVENT FLOATING

CONCRETE ENCASEMENT DETAIL
N.T.S.

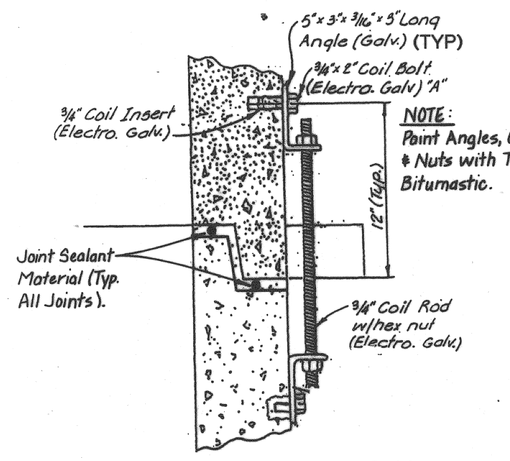

JOINT TIE DETAIL (TYPICAL)
N.T.S.

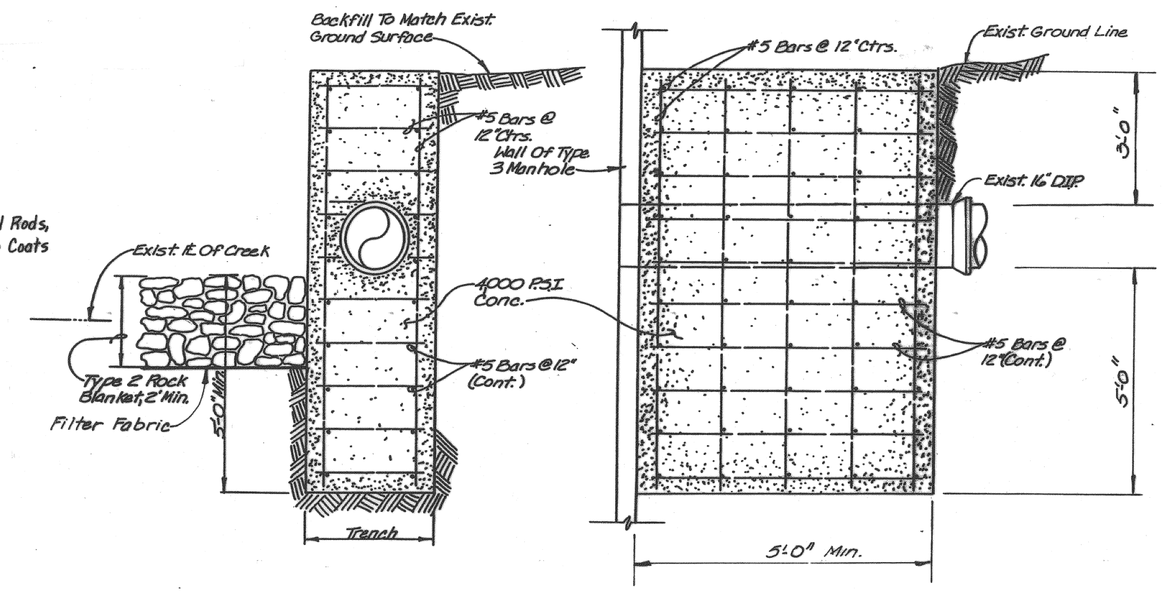

TYPE 4 CONCRETE ENCASEMENT DETAILS TOP ELEVATION
N.T.S.

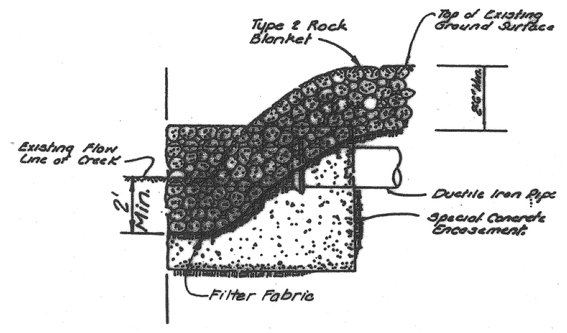

SECTION - AT CREEK BANK
N.T.S.

DETAIL - TYPE 2 ROCK BLANKET

Warrensburg MISSOURI Public Works

CITY OF WARRENSBURG, MISSOURI

STANDARD DETAILS

SCALE: N/A	APPROVED BY:	DRAWN BY SN
DATE:		REVISED 10-8-09
		DRAWING NUMBER