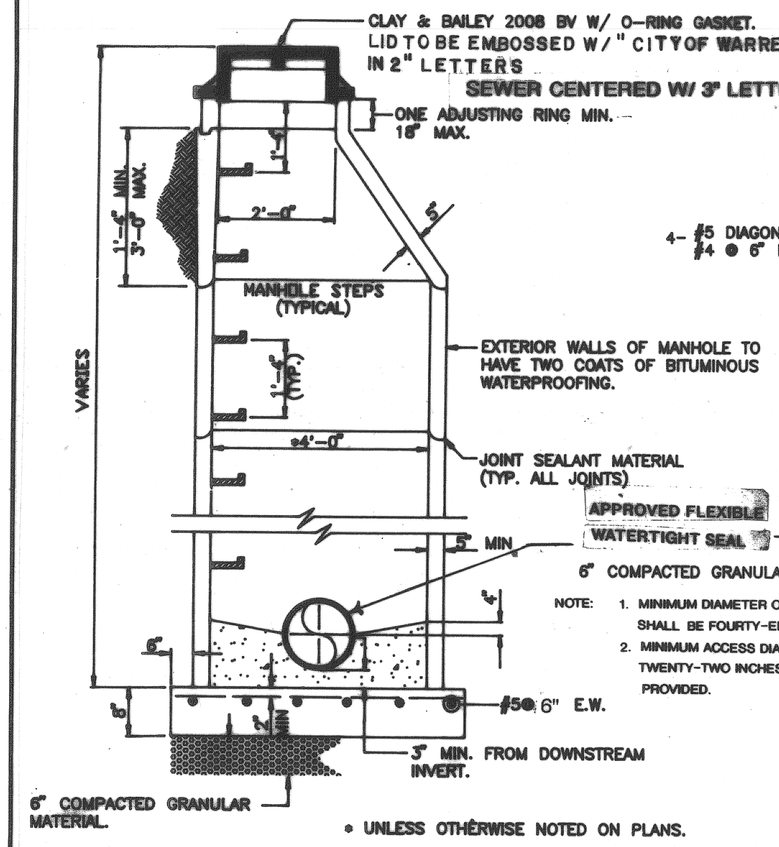

NOTE:
1. MINIMUM DIAMETER OF MANHOLES SHALL BE FOURTY-EIGHT INCHES.
2. MINIMUM ACCESS DIAMETER OF TWENTY-TWO INCHES SHALL BE PROVIDED.

* UNLESS OTHERWISE NOTED ON PLANS.

STANDARD PRECAST MANHOLE (ECCENTRIC CONE)

N.T.S.

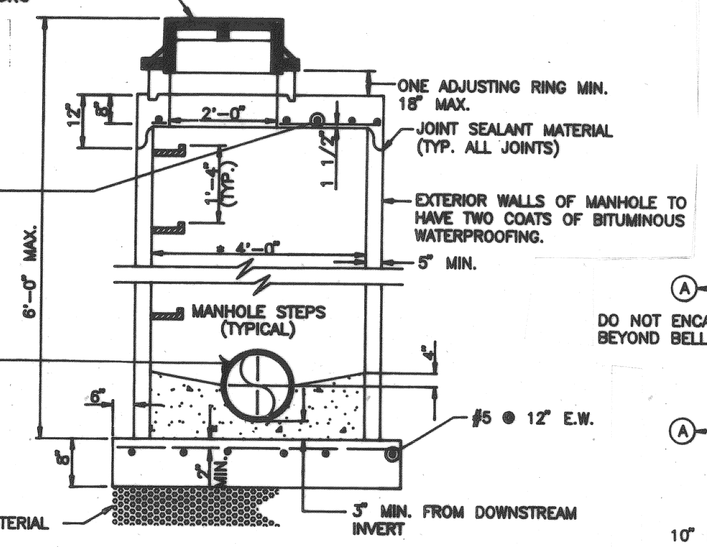

NOTE: TO BE USED ONLY WHEN SPECIFIED IN PLANS OF DIRECTED BY THE ENGINEER. COMPACTED TRENCH BACKFILL 95% MIN. WITHIN STREET RIGHT OF WAY, OTHER AREAS IN ACCORDANCE WITH SPECIFICATIONS.

* UNLESS OTHERWISE NOTED ON PLANS.

STANDARD PRECAST MANHOLE SHALLOW TYPE

N.T.S.

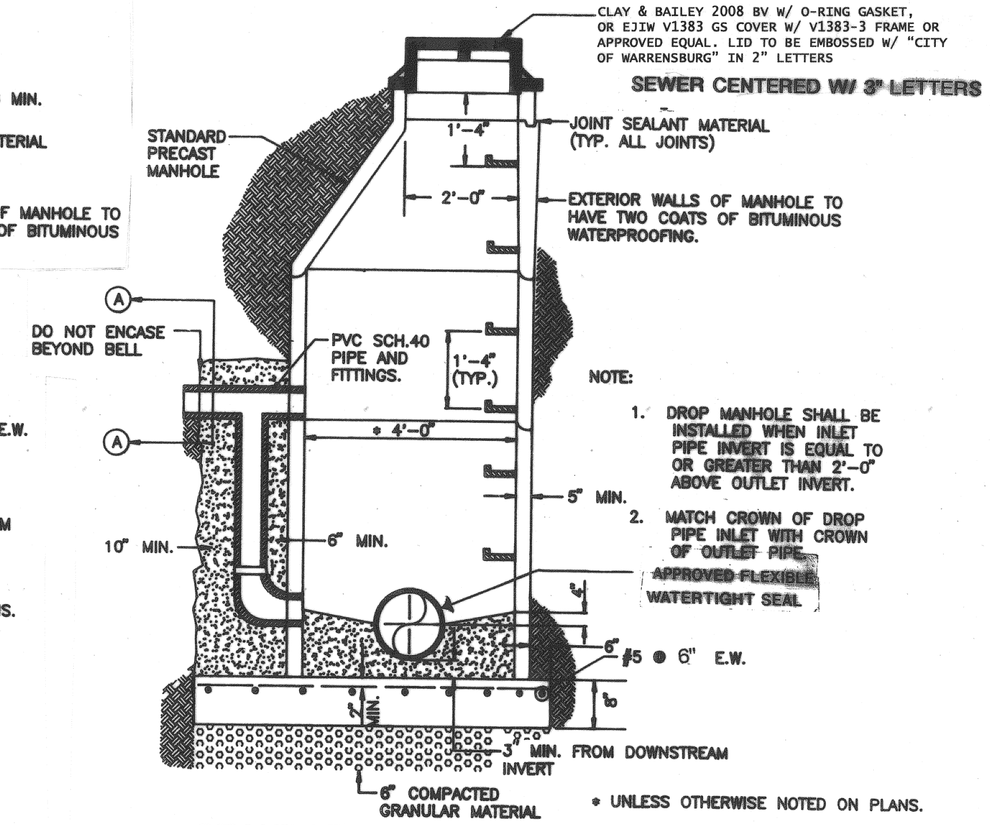

NOTE:
1. DROP MANHOLE SHALL BE INSTALLED WHEN INLET PIPE INVERT IS EQUAL TO OR GREATER THAN 2'-0" ABOVE OUTLET INVERT.
2. MATCH CROWN OF DROP PIPE INLET WITH CROWN OF OUTLET PIPE.

* UNLESS OTHERWISE NOTED ON PLANS.

STANDARD DROP MANHOLE

N.T.S.

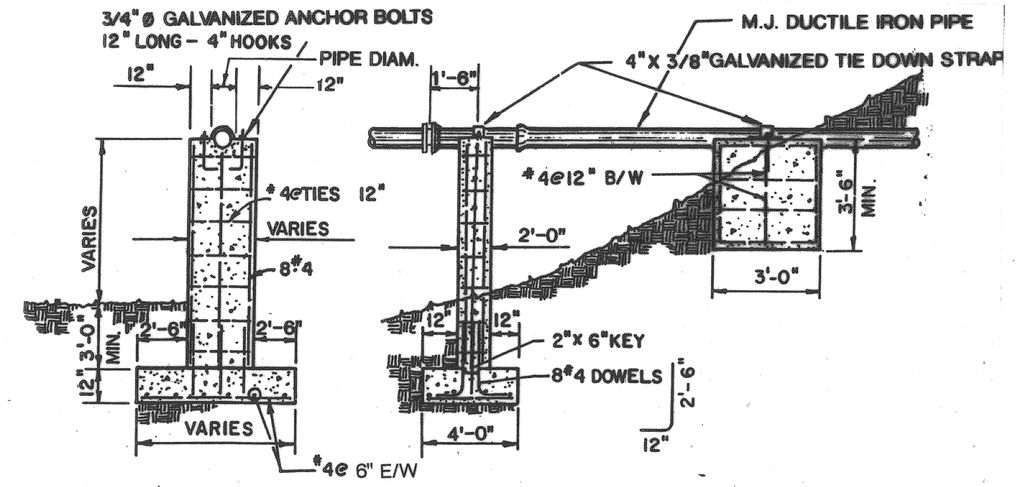

NOTE: PAINT TIE DOWN STRAPS AND ANCHORS WITH TWO COATS BITUMASTIC. ONE PIER FOR EACH LENGTH OF PIPE.

TYPE I AERIAL CROSSING DETAILS

N.T.S

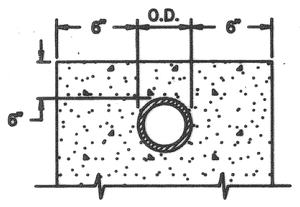

SECTION (A)

N.T.S.

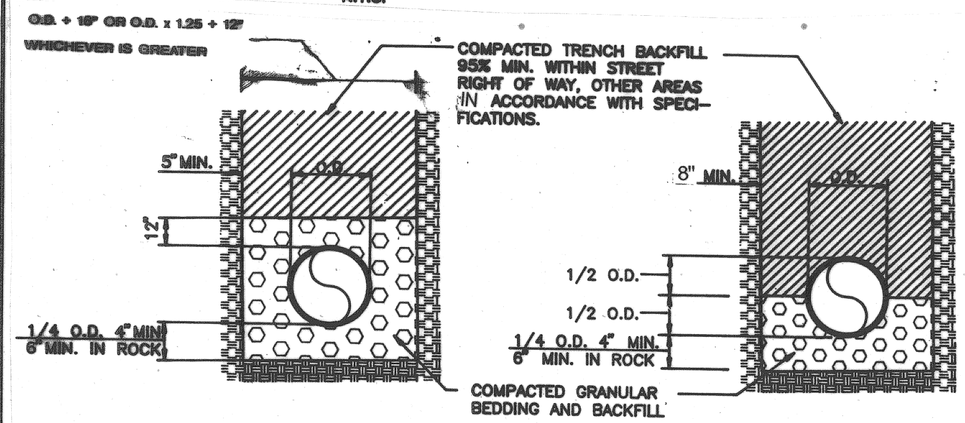

TYPE A
PVC SEWER PIPE

TYPE B
DUCTILE IRON

PIPE INSTALLATION DETAILS

N.T.S.

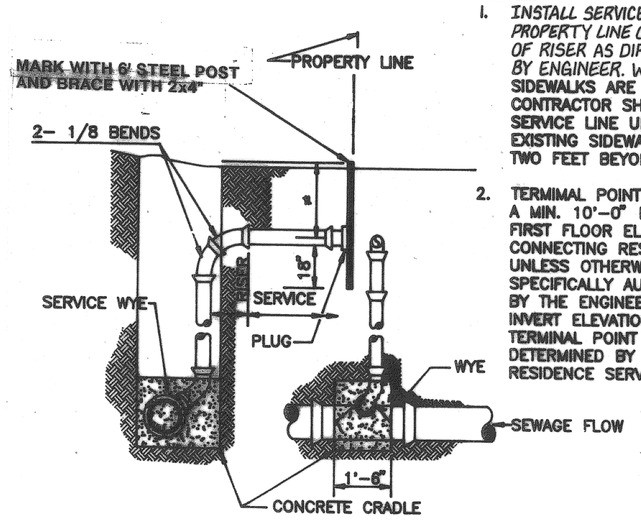

ROCK INSTALLATION

NOTE:
1. INSTALL SERVICE LINE TO ADJ. PROPERTY LINE OR TO END OF RISER AS DIRECTED BY ENGINEER. WHERE SIDEWALKS ARE PRESENT, CONTRACTOR SHALL EXTEND SERVICE LINE UNDER EXISTING SIDEWALK AND TWO FEET BEYOND.
2. TERMIMAL POINT SHALL BE A MIN. 10'-0" BELOW FIRST FLOOR ELEVATION OF CONNECTING RESIDENCE UNLESS OTHERWISE SPECIFICALLY AUTHORIZED BY THE ENGINEER. THE INVERT ELEVATION OF THE TERMINAL POINT SHALL BE DETERMINED BY THE RESIDENCE SERVED.

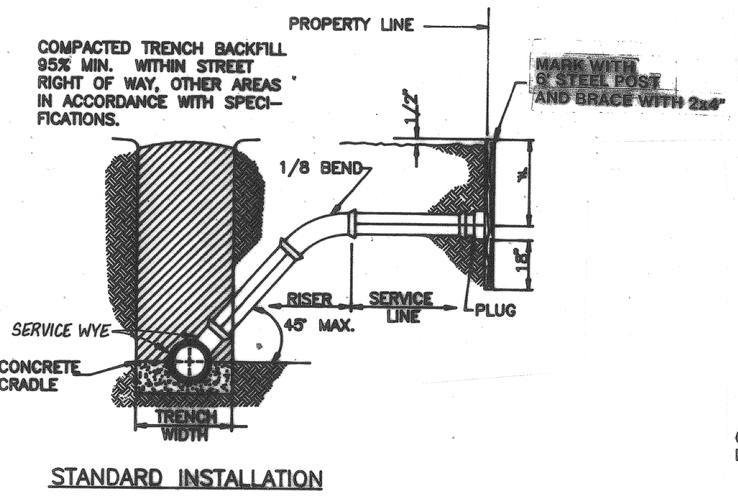

STANDARD INSTALLATION

SERVICE LINE & RISER DETAILS

N.T.S.

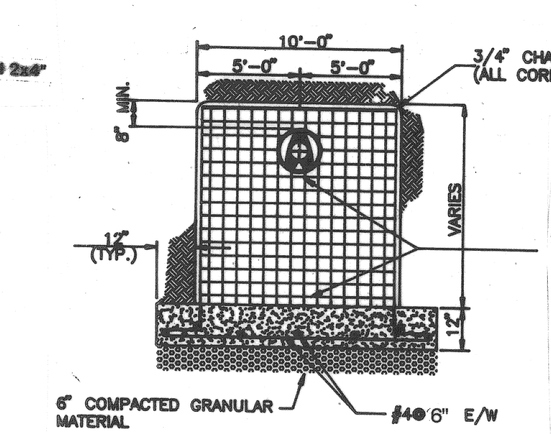

ELEVATION

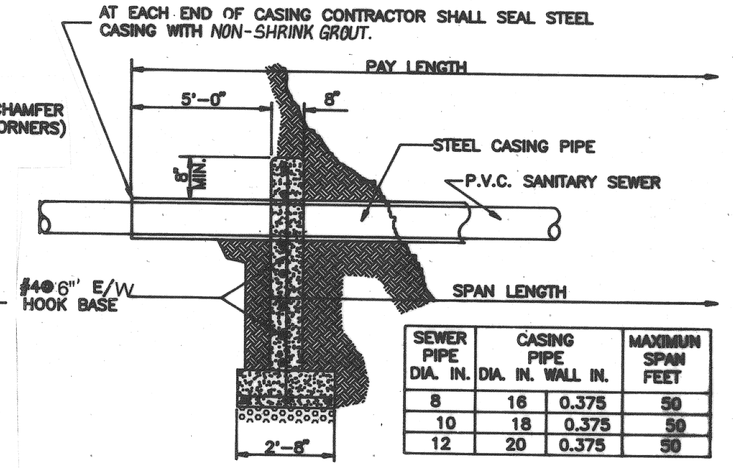

SEWER PIPE DIA. IN.	CASING PIPE DIA. IN.	CASING PIPE WALL IN.	MAXIMUN SPAN FEET
8	16	0.375	50
10	18	0.375	50
12	20	0.375	50

SECTION

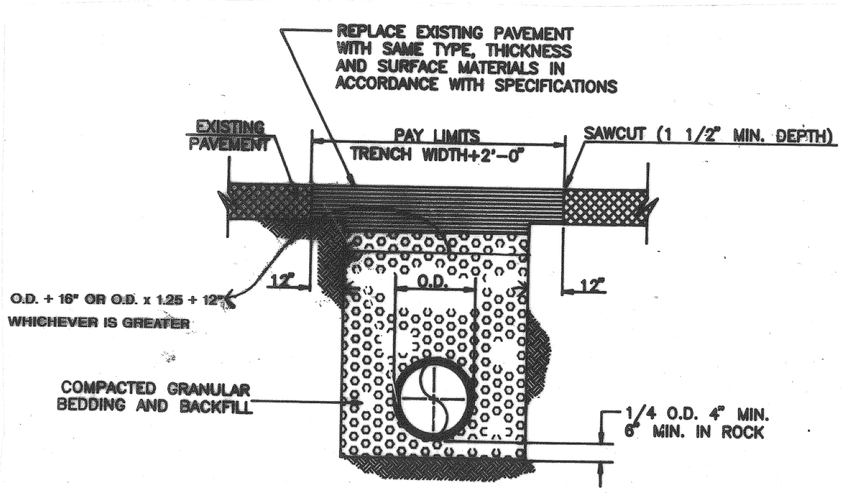

UNDER STREETS AND DRIVEWAYS BEDDING AND RESTORATION DETAIL

N.T.S.

NOTE:
1. BACKFILL SHALL BE OF A SUITABLE MATERIAL REMOVED FROM EXCAVATION EXCEPT WHERE OTHER MATERIAL IS SPECIFIED. DEBRIS, FROZEN MATERIAL, LARGE CLODS OR STONES, ORGANIC MATTER, OR OTHER UNSTABLE MATERIALS SHALL NOT BE USED FOR BACKFILL.
2. DEFLECTION TESTS SHALL BE PERFORMED ON ALL FLEXIBLE PIPE.
3. LEAKAGE TEST SHALL BE APPROPRIATE WATER OR LOW PRESSURE AIR TESTING, IN ACCORDANCE WITH ASTM C-828-76T.
4. SPECIFICATION SHALL REQUIRE THAT CLEANUP, GRADING, SEEDING, PLANTING, OR RESTORATION OF ALL WORK AREAS SHALL BEGIN IMMEDIATELY, AND EXPOSED AREAS SHALL NOT REMAIN UNPROTECTED FOR MORE THAN SEVEN (7) DAYS.

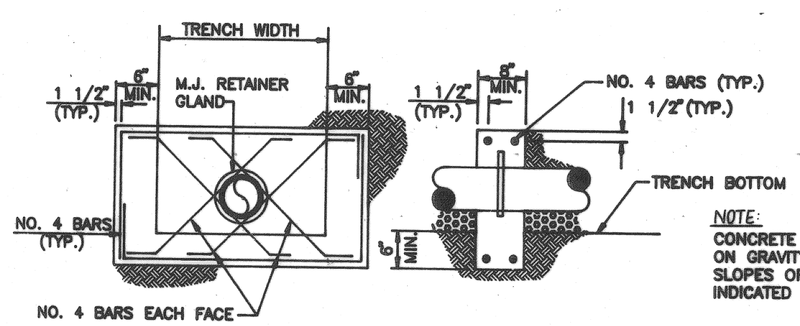

NOTE:
CONCRETE THRUST COLLAR TO BE INSTALLED ON GRAVITY SEWER LINES LAID AT 20% SLOPES OR GREATER, AT INTERVALS INDICATED ON SEWER PROFILE SHEETS.

CONCRETE THRUST COLLAR DETAIL

N.T.S.

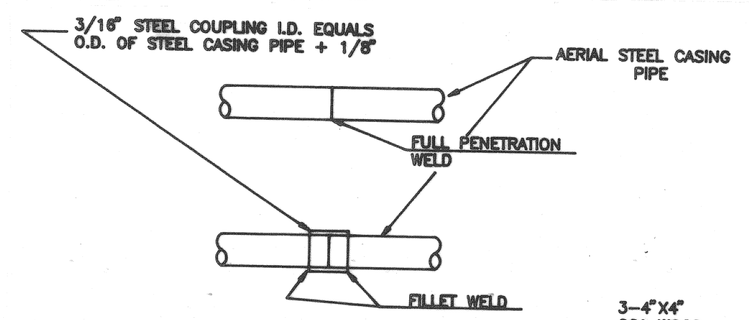

NOTE: CONTRACTOR SHALL INDICATE TO ENGINEER SPLICE OPTION TO BE UTILIZED SEE SPECIFICATIONS

SPLICE DETAIL

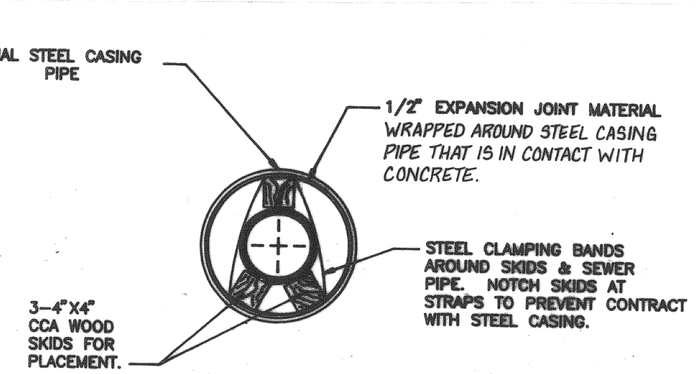

CASING

CLEAR SPAN TYPE II AERIAL CROSSING DETAILS

N.T.S.

* ALL INSTALLATION PROCEEDURES IN ACCORDANCE WITH RULES 10 CSR 20-8.110 - CSR 20-8.220 TO MEET MINIMUM REQUIREMENTS OF THE MISSOURI CLEAN WATER COMMISSION.

Warrensburg MISSOURI Public Works

CITY OF WARRENSBURG, MISSOURI

SANITARY SEWER DETAILS

SCALE: N/A	APPROVED BY:	DRAWN BY SN
DATE:		REVISED 9-25-09
		DRAWING NUMBER